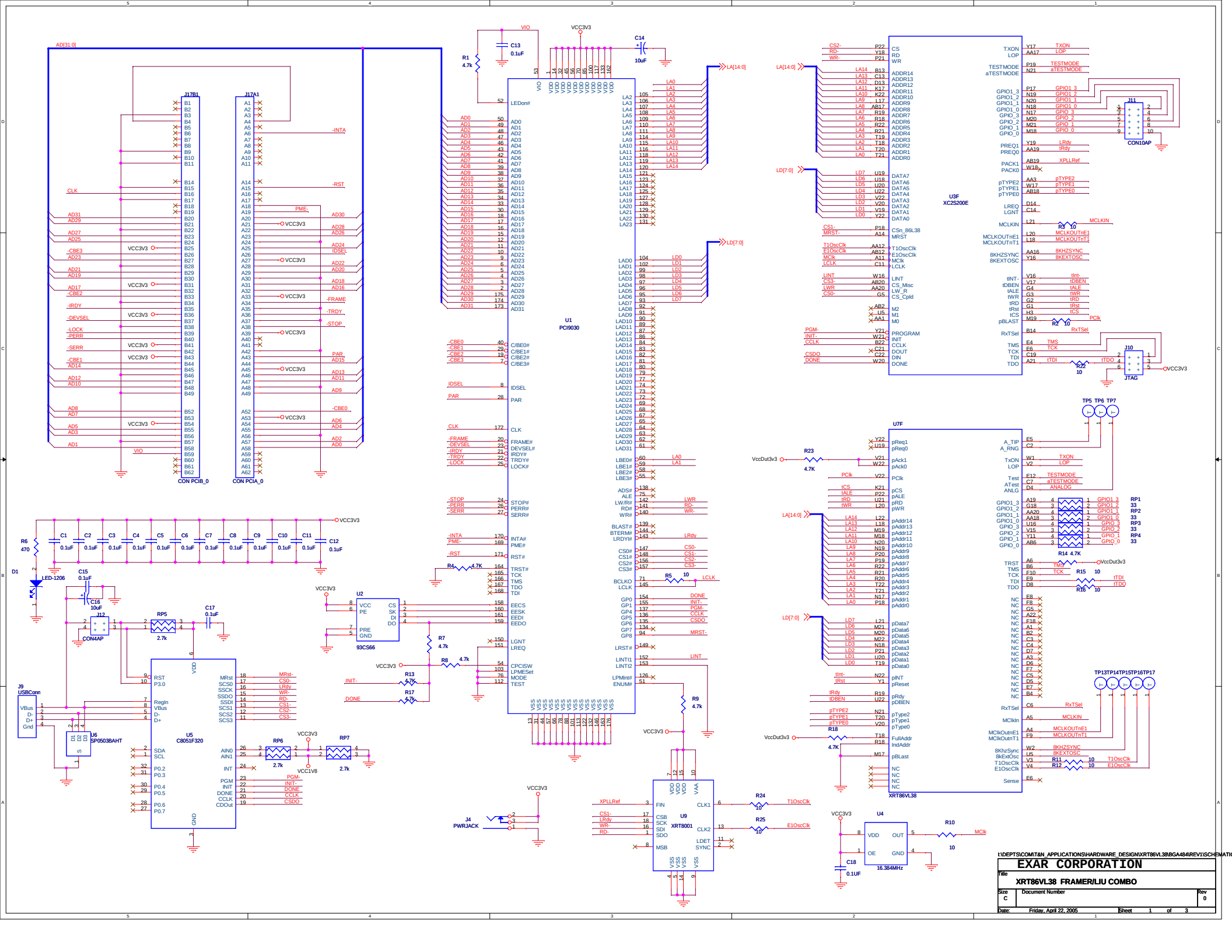
U1
PCI9030
U3F
XC2S200E
U7F
XRT86VL38
U5
C8051F320
U9
XRT8001
U4
16.384MHz
U2
93CS66
J17B1
J17A1
CON PCIB_0
CON PCIA_0
CON10AP
JTAG
CON4AP
USBConn
PWRJACK
LED-1206
U6
SP0503BAHT
I:\DEPTS\COM\T&N_APPLICATIONS\HARDWARE_DESIGN\XRT86VL38\BGA484\REV1\SCHEMATIC
EXAR CORPORATION
Title
XRT86VL38 FRAMER/LIU COMBO
Size C
Document Number
Rev 0
Date: Friday, April 22, 2005
Sheet 1 of 3

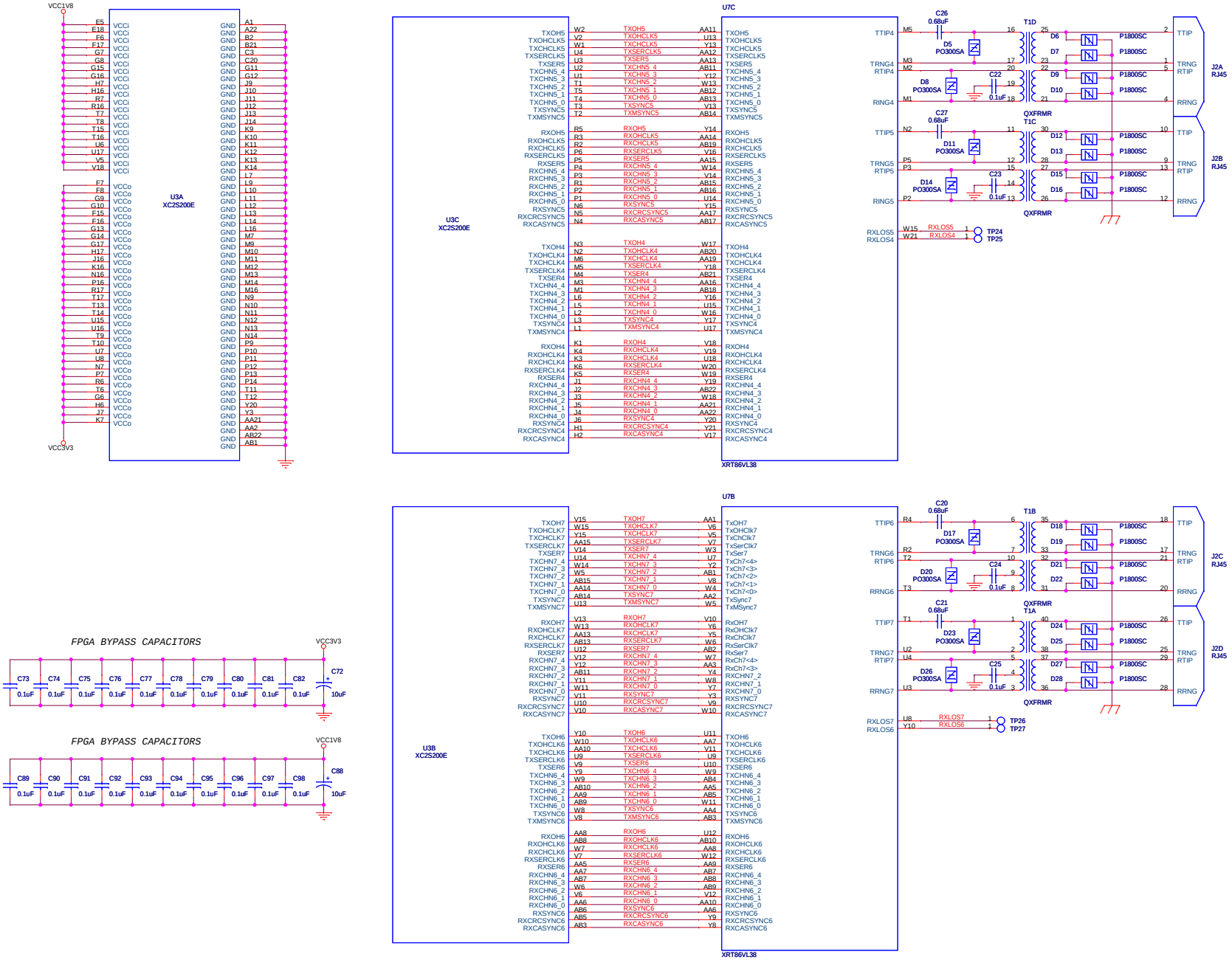

I:\DEPTS\COM\T&N_APPLICATIONS\HARDWARE_DESIGN\XRT86VL38\BGA484\REV1\SCHEMATIC

EXAR CORPORATION

Title: XRT86VL38 FRAMER/LIU COMBO

Size	Document Number	Rev
C	CHANNELS [4:7]	0

Date: Friday, April 22, 2005 Sheet 2 of 3

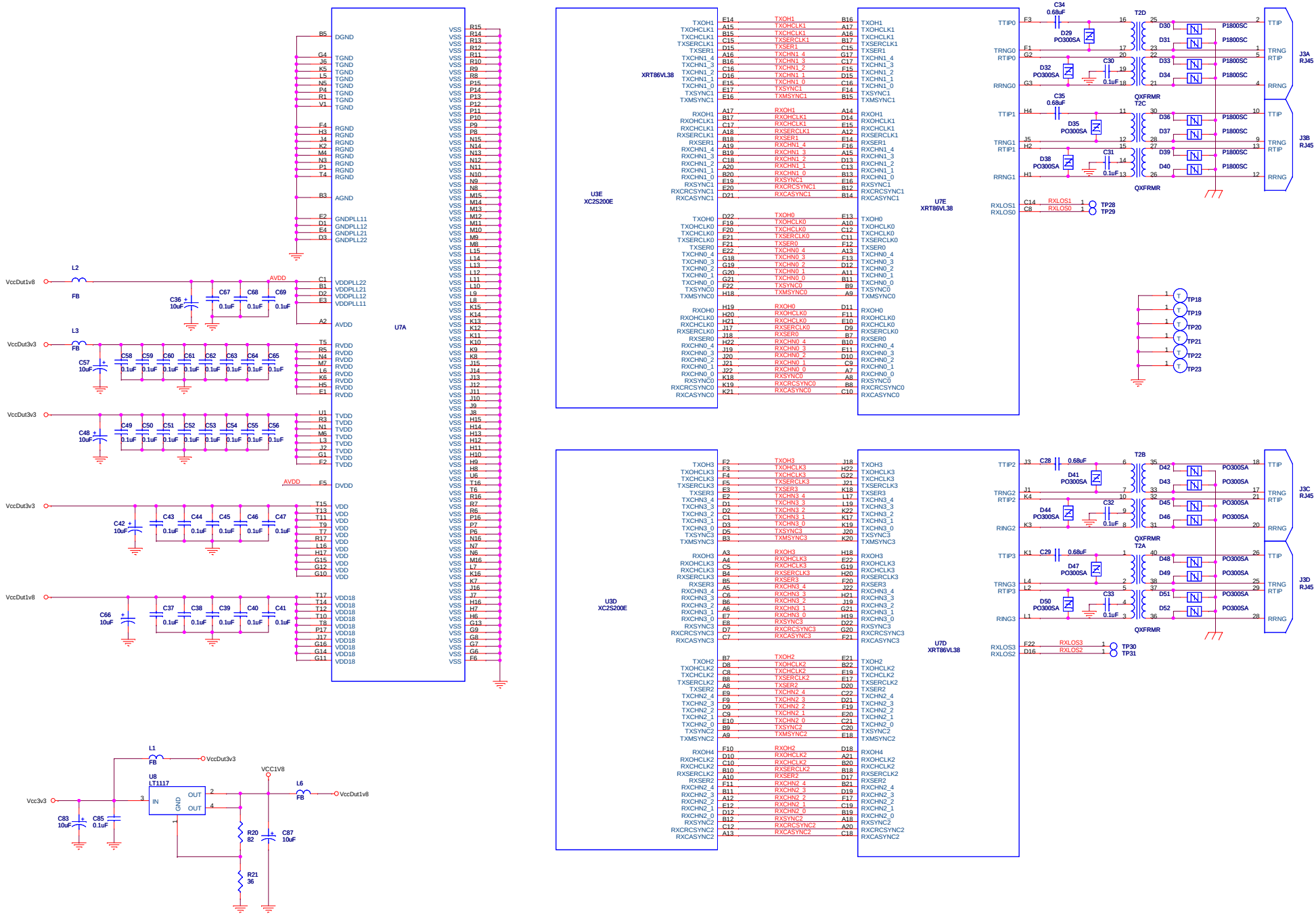

I:\DEPTS\COM\T&N_APPLICATIONS\HARDWARE_DESIGN\XRT86VL38\BGA484\REV1\SCHEMATIC

EXAR CORPORATION		
Title	**XRT86VL38 FRAMER/LIU COMBO**	
Size C	Document Number **CHANNELS [3:0]**	Rev 0
Date: Friday, May 06, 2005	Sheet 3 of 3	